Xerox® Supplies for non-Xerox® Printers

Choose Quality, Confidence and Sustainability

xerox®

Quality
Confidence
Sustainability

Like most companies, you probably have laser printers from several manufacturers.

You want to maximise the productivity of these printers and minimise admin, downtime and service calls. We understand.

You want these printers to deliver crisp, sharp images, especially when printing in color. We can do that.

Even if you didn't buy a Xerox® printer, look to Xerox for quality alternative laser cartridges. Whatever your printers brand, Xerox can help you get more value out of your everyday printing needs. With a quality that you would expect from the inventor of toner technology but at a fraction of the OEM price, Xerox® supplies for non-Xerox® printers is the perfect alternative for any company willing to reduce printing costs without compromising on quality, sustainability and health & safety.

xerox®

Quality

NOT ALL TONER IS CREATED EQUAL - WHAT MAKES XEROX® SUPPLIES FOR NON-XEROX® PRINTERS STAND OUT?

We invented toner over 75 years ago, and then we invented laser printing. Our xerographic expertise means that with Xerox laser cartridges, you can expect great performance from the first print to the last.

The secret? It's the team of specialist engineers and technicians behind the scenes in the Xerox Cartridge Technology Centre. With nearly 200 years' combined supplies experience and 75 years of Xerox know-how they work hard to ensure you can put Xerox engineered quality into all your printers, no matter the brand.

We test our cartridges in hot and cold conditions that surpass the conditions you would experience in your office, and we carefully study image quality factors, including colour fidelity, halftone and solid image density, and uniformity as well as many others.

TESTED FOR QUALITY ASSURANCE

To ensure your satisfaction, we constantly monitor manufacturing quality.

First, we immediately print test 100% of cartridges after assembly.

Then, we perform life testing at the manufacturing site to ensure performance throughout the full cartridge life.

Rigorous testing and our expertise in xerographic technology enable us to put quality into every Xerox laser cartridge. Our name is on the box and our quality is inside.

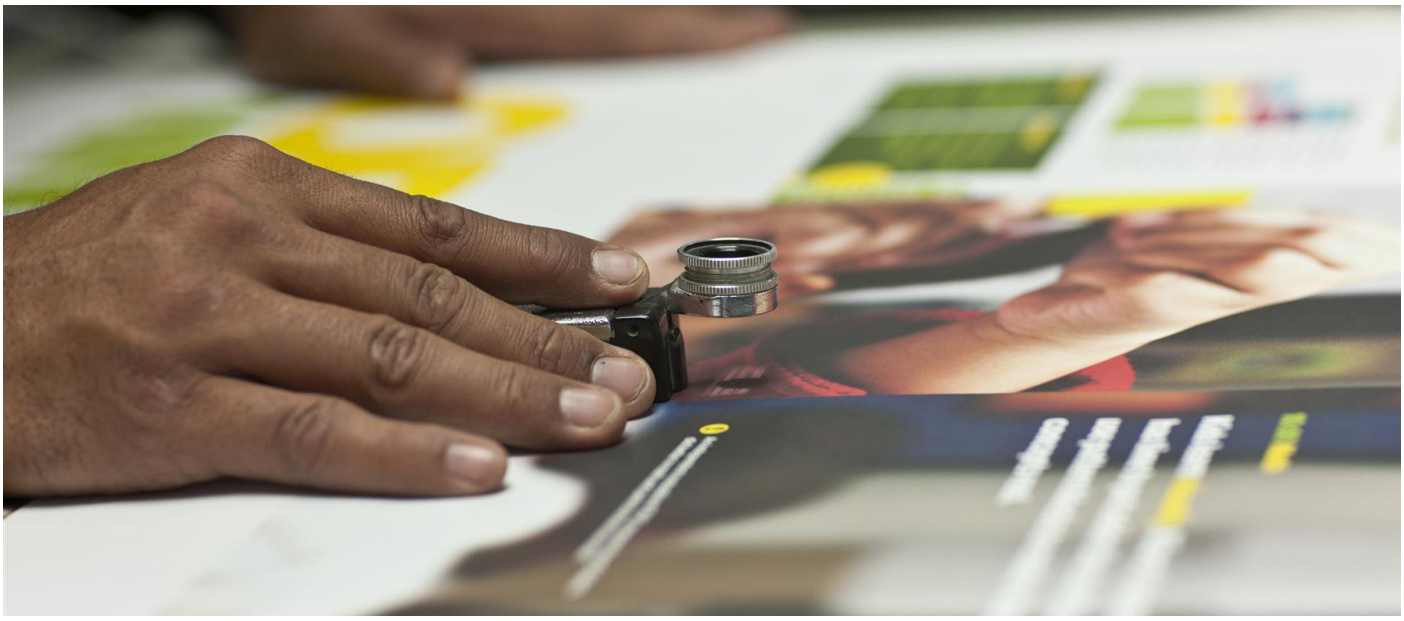

CERTIFIED TO MEET YOUR EXPECTATIONS

There are a number of cartridge choices on the market. From OEM to toner refill, there are options for every budget. But, to Xerox, there is only one standard - the printer OEM (Original Equipment Manufacturer). Our goal is to get as close as we can to the OEM in every way but cost.

And if we cannot get close to the OEM quality and performance, we simply don't sell that particular cartridge.

Xerox laser cartridges meet demanding Xerox specifications as well as some pretty tough independent standards...because we want to meet your standards, print after print.

PATENTS & INTELLECTUAL PROPERTY

Xerox is committed to intellectual property protection. As an OEM with an extensive patent portfolio, we respect the intellectual property of your printer manufacturer and diligently work to prevent any known patent infringements.

You can be confident that your Xerox® cartridge is free from intellectual property risk.

Confidence
Sustainability

CONFIDENCE

Lifetime Warranty

We're so confident about our Xerox® supplies for non-Xerox® printers that we provide a Lifetime Warantee on all cartridges and drums.

Our compatibility is proven

We continually test the compatibility of our cartridges and drums across hundreds of printer brands and models. So whether you have an HP printer, or any other brand, you can be confident about print quality and compatibility.

The only 100% risk-free choice

When you choose a Xerox cartridge for your non-Xerox printer, there is no risk to your OEM printer warranty.

We offer a free technical support line in case you have questions or need technical assistance. If a technical issue cannot be resolved with the support line , we will send a free replacement cartridge. If our cartridge is responsible for any printer damage, Xerox will pay your repair costs.[1]

It's that simple. No risk.

SUSTAINABILITY / HEALTH & SAFETY

Xerox has a very long history of environmental stewardship. Xerox® supplies for non-Xerox® printers keep plastic out of the waste stream. Whenever possible, components are reused. Any component requiring replacement to satisfy performance requirements is replaced 100%.

We ensure Xerox® cartridges comply with EU environmental regulations (CE, REACH, RoHS, WEE regulations) and health and safety standards. Material Safety Datasheets (MSDS) are available for each toner cartridge.

STANDARDS AND ACCREDITATIONS

ISO 9001 · ISO 14001 · ISO/IEC 19752* · ISO/IEC 19798* · STMC · DIN 33870

RoHs · REACH · WEEE · EU Ecolabel* · Nordic Ecolabel* · Blue Angel*

* Applies to a selected list of cartridges - list available on demand

IT'S WHAT'S INSIDE THAT COUNTS

A typical cartridge

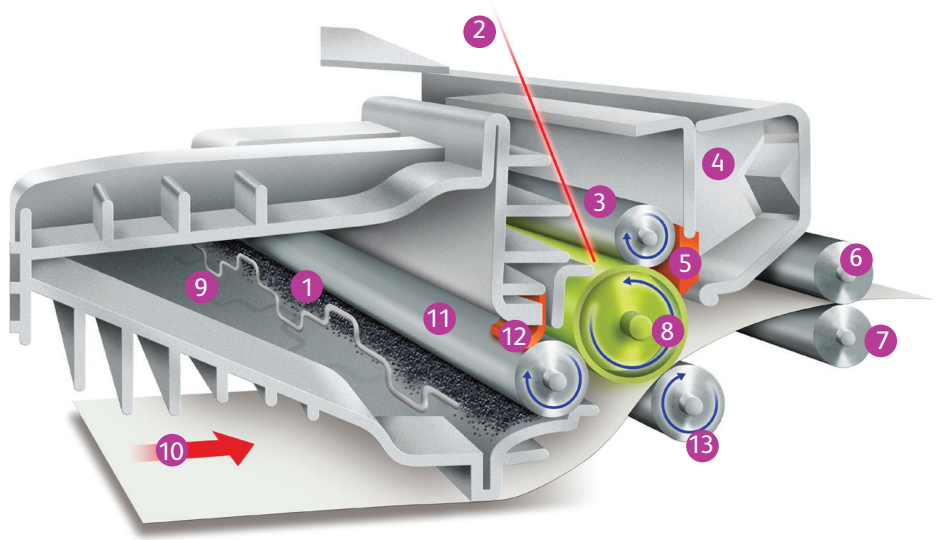

1. Toner
2. Laser
3. Primary Charge Roller (PCR)
4. Waste Toner Hopper
5. Recovery Blade
6. Upper Fuser Roller
7. Lower Pressure Roller
8. Photoreceptor Drum
9. Toner Supply Hopper
10. Paper
11. Developer Roller
12. Doctor Blade
13. Transfer Roller

[1] Evidence of repair and cost needs to be provided for printer repair reimbursement.

Third Party test – Xerox® supplies vs bargain brands

Buyers Laboratory (BLI), a renowned laboratory, conducted an independent comparative lab evaluation of a bargain brand and Xerox® cartridges for the HP® M451.

The results of BLI's test showed that the Xerox® cartridges were overall superior to the bargain brand cartridges.

TESTING PROCESS

BLI acquired nine sets of Xerox® and bargain brand black, cyan, magenta and yellow cartridges and tested them in three HP LaserJet Pro 400 Color M451nw printers dedicated to each brand (three sets per printer), in accordance with ISO/IEC 19798 testing protocol.

RELIABILITY

There were no premature expirations whatsoever with the Xerox® cartridges, whereas 12 of the bargain brand failed prematurely due to unrecoverable image fade.

Brand	Color	Number of Cartridges Tested	Premature Expires
Xerox	Black	9	0
	Cyan	9	0
	Magenta	9	0
	Yellow	9	0
Bargain brand	Black	9	4
	Cyan	9	1
	Magenta	9	7
	Yellow	9	0

PAGE YIELD

The tested ISO 90% LCB page yields for Xerox exceeded the bargain brands for all colors.

• Notably, as seen in the chart below, the bargain brand failed to meet its rated yields by significant margins.

Toner Color	Rated Yield	Xerox tested ISO 90 % LCB Yield*	Bargain brand tested ISO 90 % LCB Yield*	Additional pages produced by Xerox
Black	4000	4606	2127	54 %
Cyan	2600	4110	2144	48 %
Magenta	2600	3752	1279	66 %
Yellow	2600	3315	2199	34 %

* ACCOUNTS FOR VARIATIONS IN YIELDS ACROSS THE NINE CARTRIDGES AND IS THEREFORE MORE ACCURATE THAN SIMPLY AVERAGING THE RESULTS FOR ALL CARTRIDGES; IT REPRESENTS A YIELD THAT CAN BE EXPECTED TO BE ACHIEVED OR EXCEEDED WITH 90% CONFIDENCE.

IMAGE QUALITY

The Xerox® cartridges produced very good overall image quality:

• Characters were fully formed and dark, with average sharpness and competitive smoothness of curves/serifs

• Circles were fully formed while consistency of line thickness was average

• Solids had average darkness, with consistent coverage

The bargain brand results were inferior to those from Xerox:

• The bargain brand cartridges had some stair-stepping (see Exhibit A, below)

• Photographic images were washed out (see Exhibit B, below)

• All of the bargain brand cartridges output suffered from a line—in any of the four colors—down the right side of pages (see Exhibit C, below)

EXHIBIT A: OUTPUT PRODUCED BY THE BARGAIN CARTRIDGES SHOWED STAIR-STEPPING ON CHARACTERS.

EXHIBIT B: BACKGROUNDS PRODUCED BY THE BARGAIN BRAND CARTRIDGES WERE WASHED OUT.

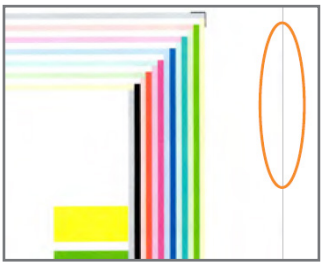

EXHIBIT C: ALL BARGAIN BRAND CARTRIDGES PRODUCED A LINE DOWN THE RIGHT SIDE OF THE PAGES

Quality
Confidence
Sustainability

Whatever your printer brand, Xerox supplies get your printing needs covered.

Visit the Cartridge Finder to see how much you can save on all your supplies.

www.xerox.co.uk/printer-supplies/compatible-cartridges/engb.html

©2017 Xerox Corporation. All rights reserved. Xerox® and Xerox and Design® are trademarks of Xerox Corporation in the United States and/or other countries. BR21867